Art.Nr.: V20107
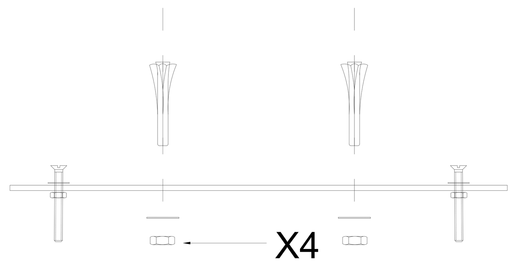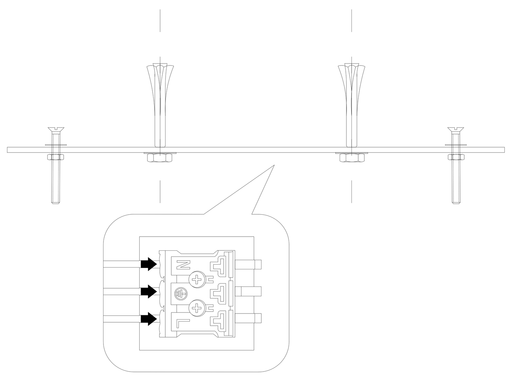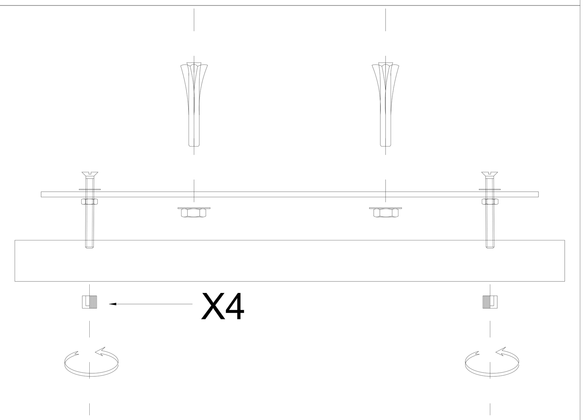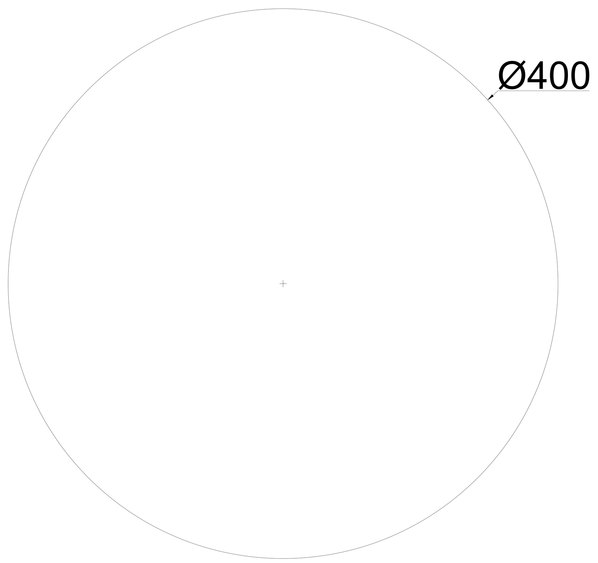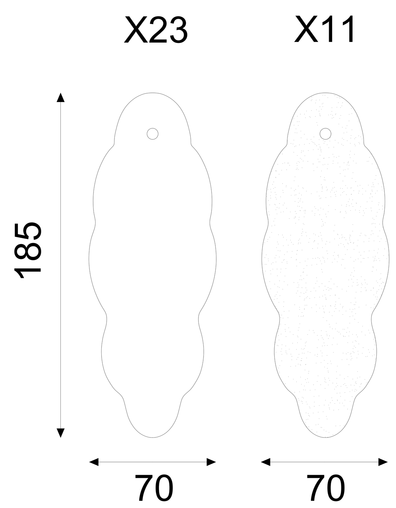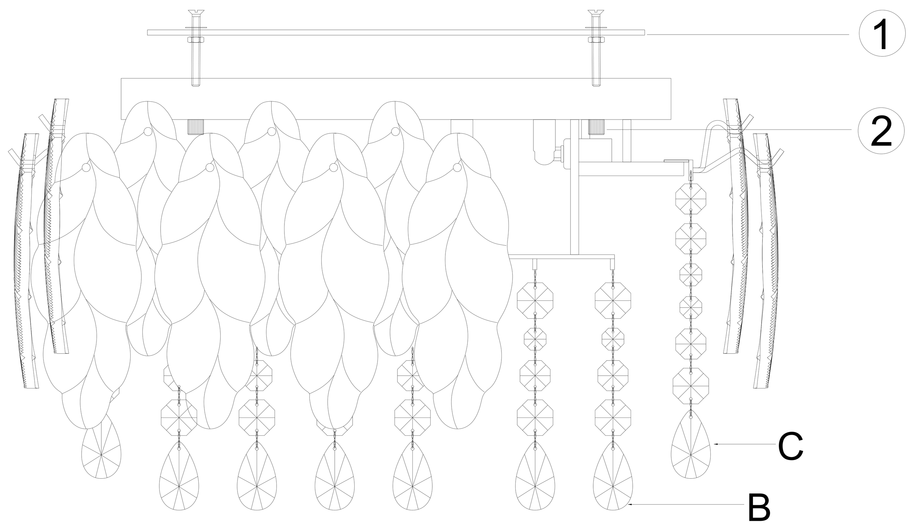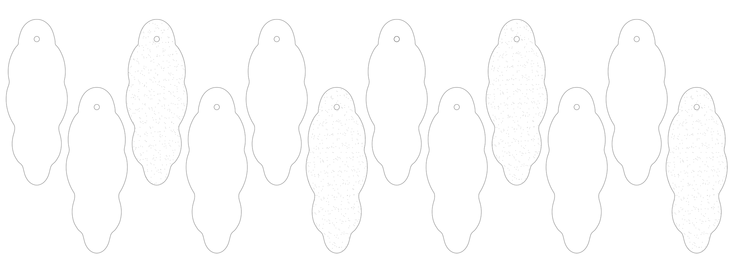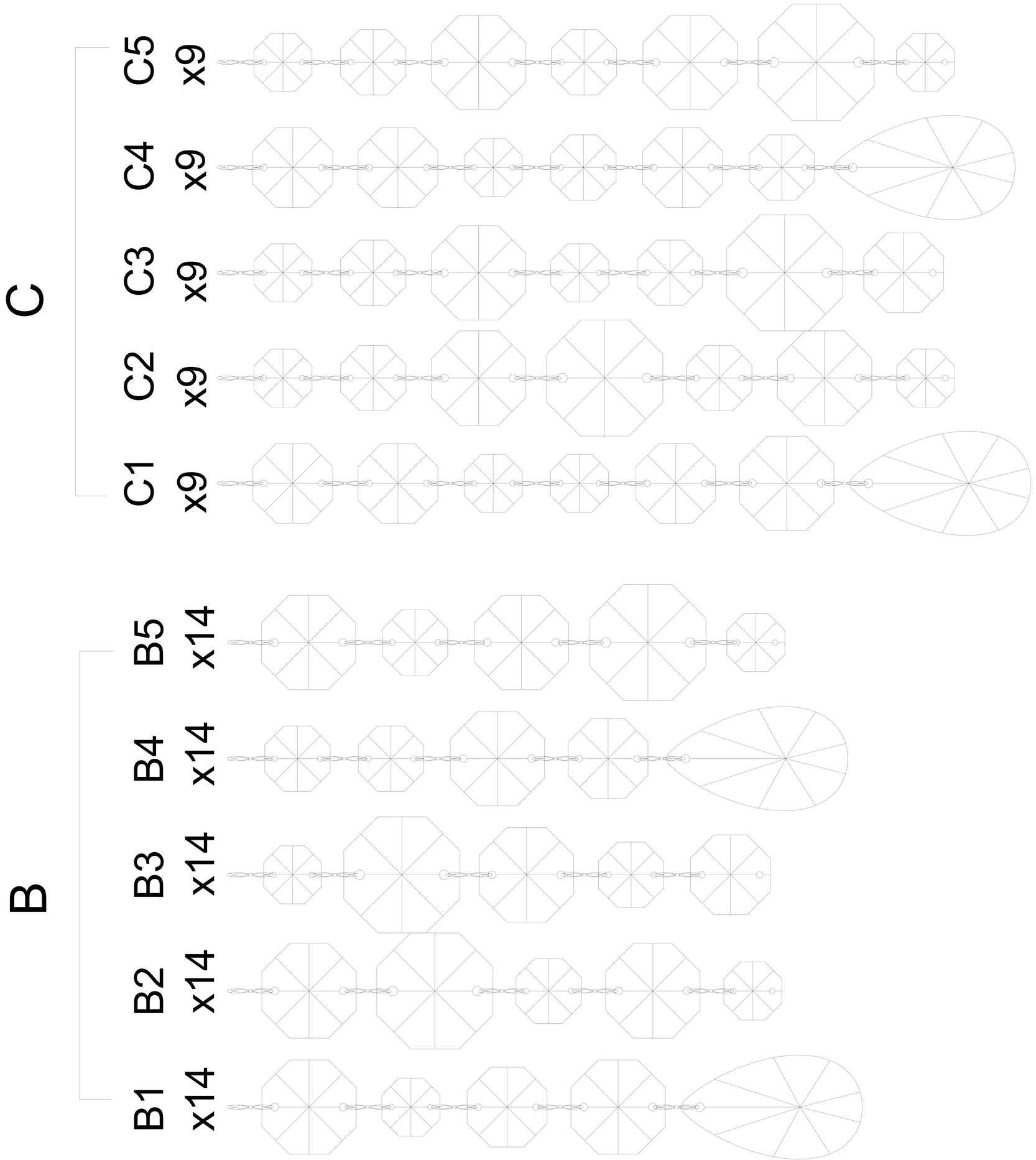
max.12x40W (G9)